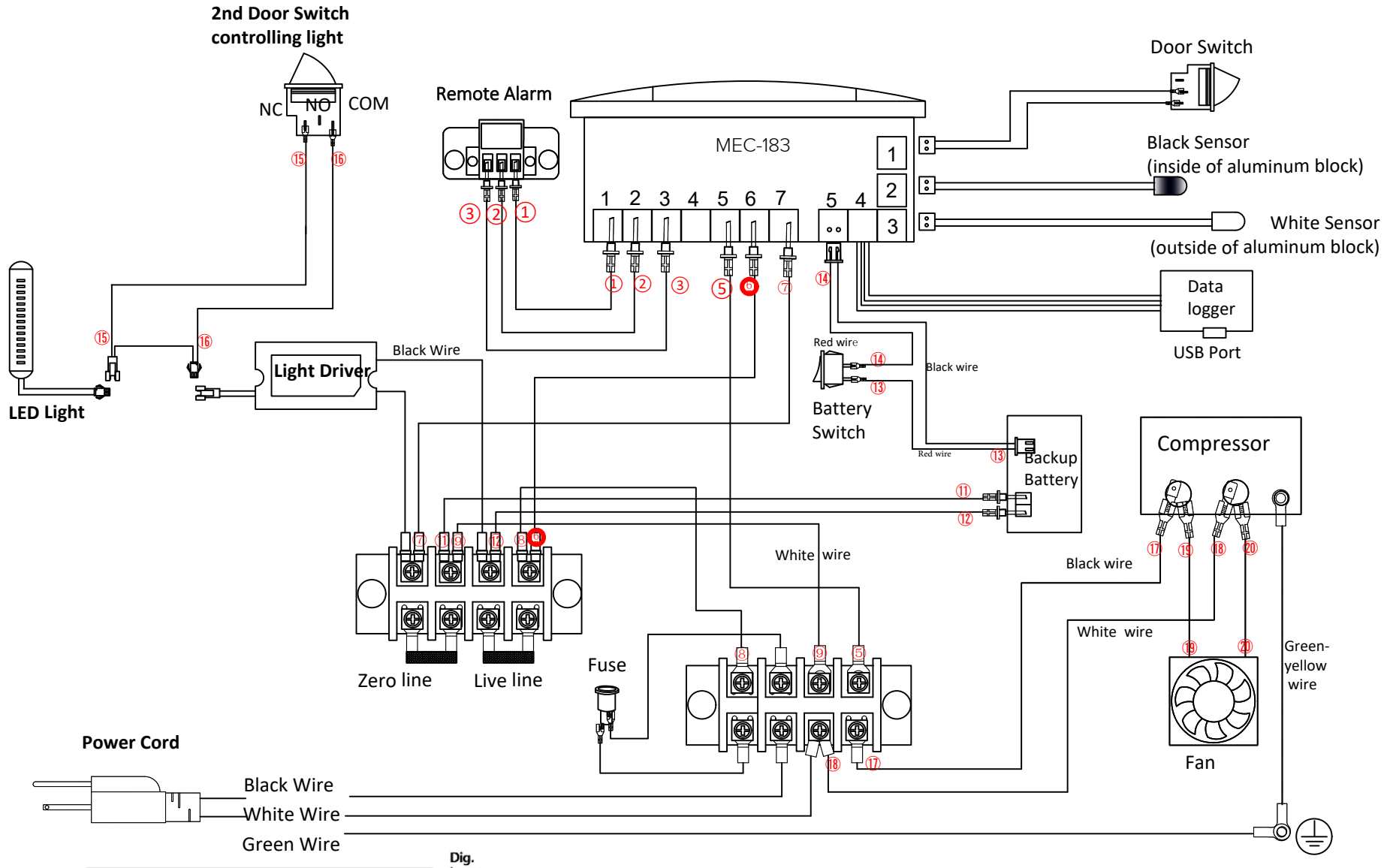

Controller wiring diagram MEC-183

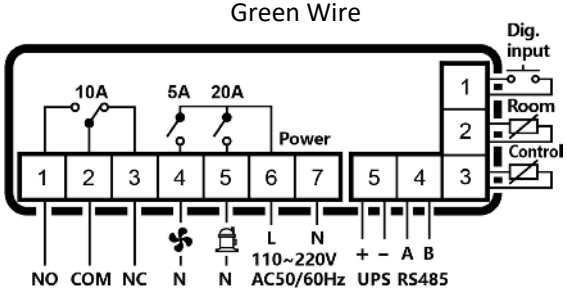

Title: Wiring diagram for LFE 125 US

ARCTIKO
true cooling specialists
Oddesundvej 39
6715 Esbjerg N, Denmark
Tel.: +45 7020 0328
www.arctiko.com

Drawing no.:	5086146	Revision:	01
Drawing (initials):	DS	Date:	20/06/2023

Approval:

All rights to this drawing belong to Arctiko A/S.